1AHORBBSC

Specifications

WIDESPREAD LAV SET (LESS DRAIN)

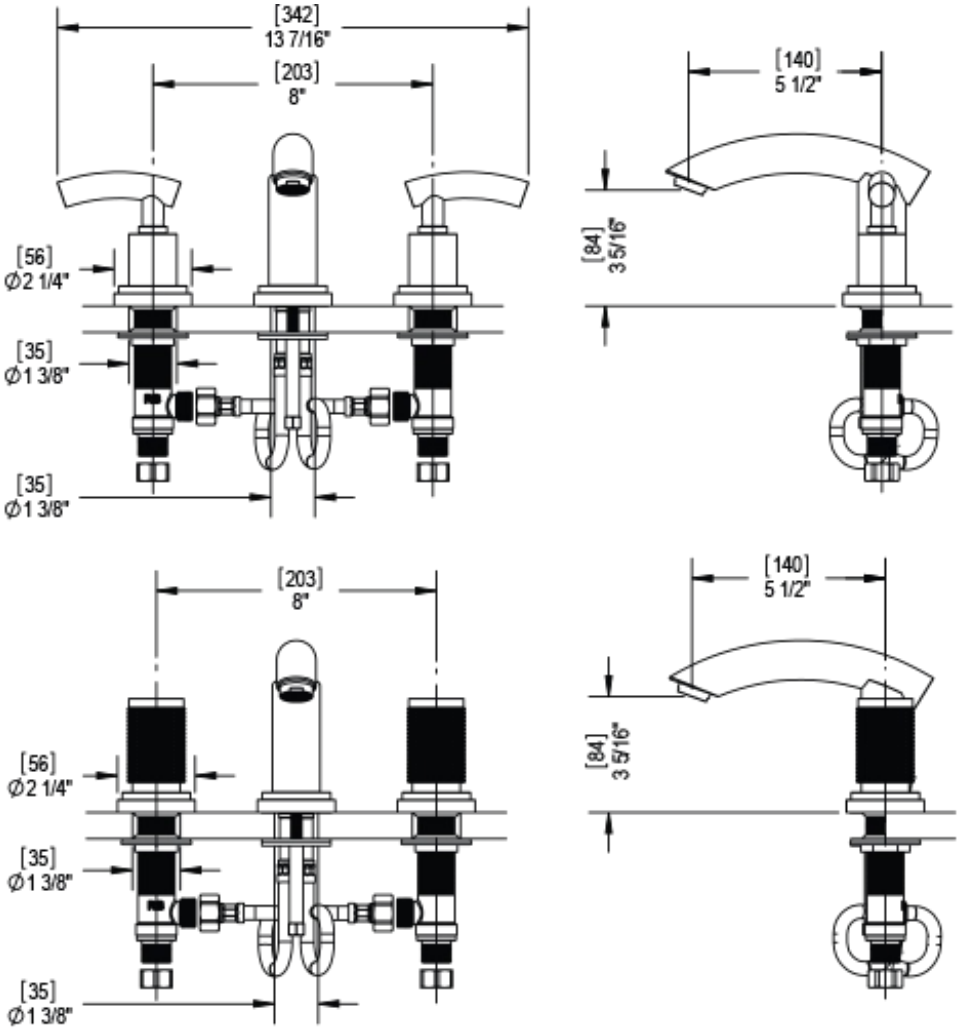

Tel: 905-851-6780
Fax: 905-851-8031
Toll Free: 800-461-5901