Art. 8051U

Wall-mount handshower set

- SUN handshower with anti-siphon check valve
- Anti-lime scale system
- 58" vinyl hose
- Water outlet with shower holder
- Round escutcheon
- Water flow restricted to 1.8 GPM
- 1/2" Male NPT fittings

Finishes:

☐ **Chrome** 86 02 8051U

Project:

Room:

Date:

Comments:

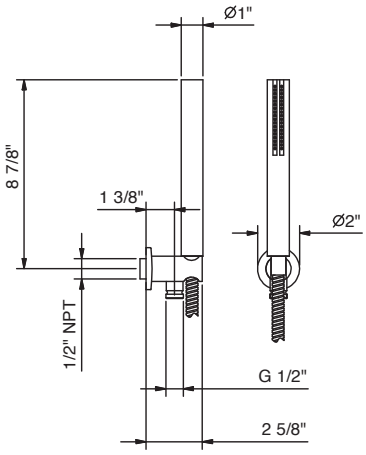

Certifications/Awards:

CAL
GREEN